BBC ELETTROPOMPE s.r.l.

AUTOMATIC CONTROL PANEL FOR A SINGLE - PHASE PUMP

QM BT

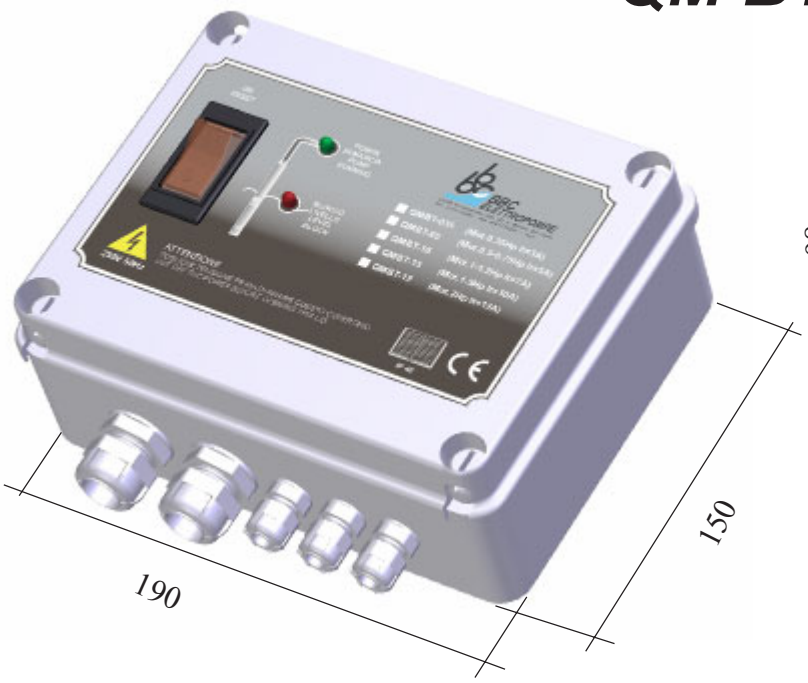

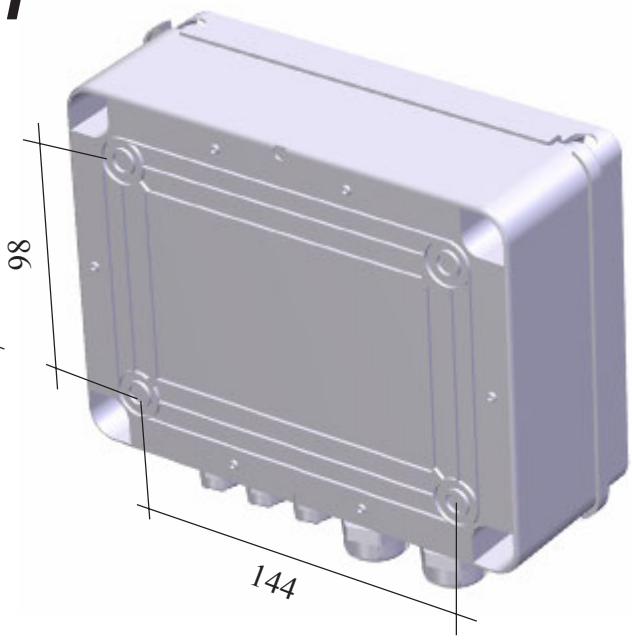

WARRANTY:
All panels, defective in components or materials, will be repaired, Free our Premises, within 12 months from their delivery date.
Warranty will not cover any defect caused by: wrong connections, accidents, illegitimate use, tampering, carelessness or any other use, excluding defects in components or materials.

FUNCTION:
The control panel checks the running of the pump and protects it from dry running and overload of the motor.

USE:
Control of one single-phase electric pump used for non-inflammable conductive liquids.

TECHNICAL FEATURES:
ON: Thermal protector switch lighted
GREEN LIGHT: Pump running
RED LIGHT: Pump waiting for level restoration
OFF: Thermal protector switch not lighted
RESET: Automatic or manual with thermal protector switch.

OPERATION:
The electronic card monitors continually the level of the liquid to be pumped so that, in case it descends below the minimum fixed level, the pump does not start or stops running.
The operation can be:
automatically timed (by means of a TIMER that starts the electric pump 10 minutes later the intervention of the level cut out, provided that the liquid has begun to refill the borehole / tank);
with CL (LEVEL CONTROL) with minimum and maximum level threshold.
The bipolar thermal protector switch protects the motor from any abnormal oveheating.
In case of intervention ot the thermal protector switch, check the reason before resetting the system.

INSTALLATION:
Since the installation is a potentially risky and fairly complex operation, it should be done only by qualified and authorized personnel.
- During the installation, apply all laws issued by local authorities and suggested by common sense.
- Fix the cable of the electric pump and that of the electrodes to the discharge pipe so that they can not twist.
- The installer must effect all connections in conformity with the laws of the Country where the panel is installed.
- Check that the power supply corresponds to the data plate on the electric pump.
- Before making the connection, be sure that the plant is provided with an efficient earth circuit. The earth wire, green-yellow coloured, must be longer than the phase wires and must be the first to be connected during the installation and the last when disconnecting the panel.
- We do reccommend to install a 30mA residual current device.

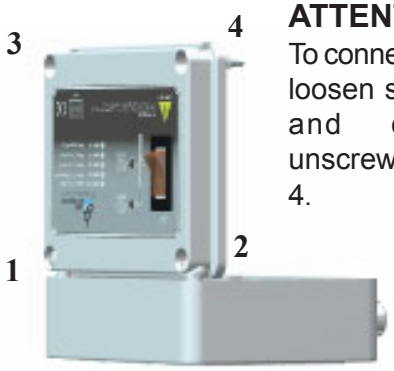

ATTENTION:
To connect the panel, loosen screws 1 - 2 and completely unscrew screws 3 - 4.

ELECTRIC FEATURES:

· Feeding voltage: 230V 50/60Hz
· Input in very low tension to be controlled by probes, float switches, pressure switches switches etc.
· Nominal Resistive current of the relay 30A at 230V
· Protection degree: IP 40 (IP 55 on request)
· Ambient temperature: -5 / +40°C
· Relative Humidity: 50% with 40°C maximum temperature

TERMINAL BOX DIAGRAM:

LINE CABLE:
1 - L1: Phase (Black or Brown)*;*
2 - N: Neutral (Blue)*;*
3 - PE: Earth (Yellow-green).
PUMP CABLE:
4 - PE: earth (Yellow-green)
5 - Run + Capacitor*;*
6 - Common*;*
7 - Start + Capacitor*;*
8 - Common probe*;*
9 - Minimum level probe*;*
10 - Maximum level probe*;*
11-12 - Automatic device (float switch, pressure switch, remote control switch, etc.).

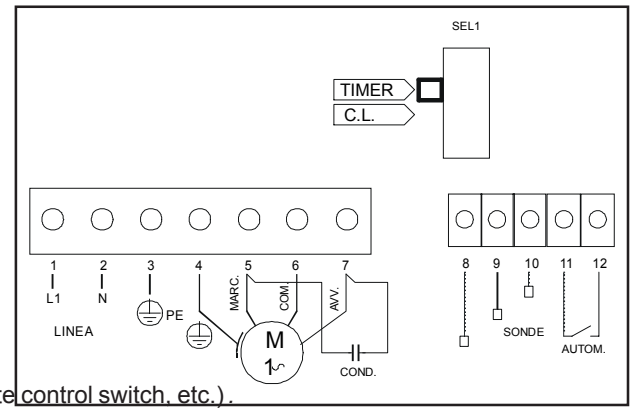

Fix the capacitor through the proper fixing bands.
Use terminals 4 - 5 - 6 in case of electric pumps supplied with integral capacitor.

The electronic circuit exploits the grounding of the electric pump. Please, install a common probe (TERMINAL 8) whenever the grounding is not sufficient or the pipes are not metallic.

POSSIBLE INSTALLATIONS:

1) Automatic timed operation:
When the liquid descend below the minimum level probe, the pump stops; 10 minutes later, if the liquid starts growing, the circuit will start the pump again.
Install a minimum level probe and set the selector on TIMER mode.

2) Operation as Level Control:
When the liquid descends below the minimum level probe, the pump stops; when the liquid liquid covers the maximum level probe, the pump starts.
Install a minimum level, a maximum level probe and set the selector on CL mode.

3) Manual operation:
The pump starts by turning the switch ON and stops by turning it OFF. It is protected against dry running.
Install a probe to set the minimum level and set the selector on CL mode.

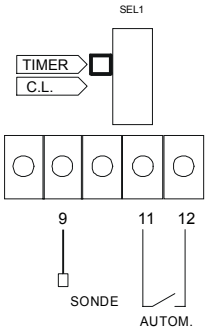

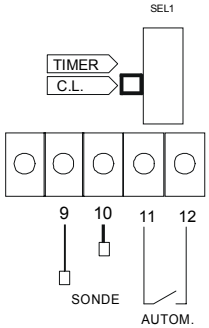

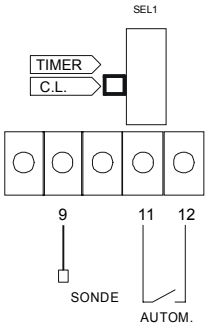

PROBE ESU - E

Description:
1) Electric cable
2) Cable-clip head
3) Cable-clip body
4) Connector
5) Electrode
6) Body of the probe

Assembling:
a) Slip the electric cable **1** into the cable-clip head **2** and then into the cable-clip body **3**
b) Seize the electric cable **1** with proper nippers in the connector **4**
c) Strongly slip the connector **4** into the electrode **5**
d) Screw the cable-clip body **3** in the body of the probe **6**
e) Tighten the cable-clip head **2** in the cable-clip body **3**.